dma clinical pilates equipment

Self-Servicing information

Reformers

1) Replace ropes
2) Replace springs
3) Replace shoulder pads FR and CR
4) Replace tracks
5) Replace wheels
6) Replace carriage board on steel carriage
7) Replace headrest
8) Replace clickers
9) Replace foot bar
10) Replace adjuster bracket
11) Replace and tighten screws
12) Replace struts
13) Replace pulleys
14) Replace cleats

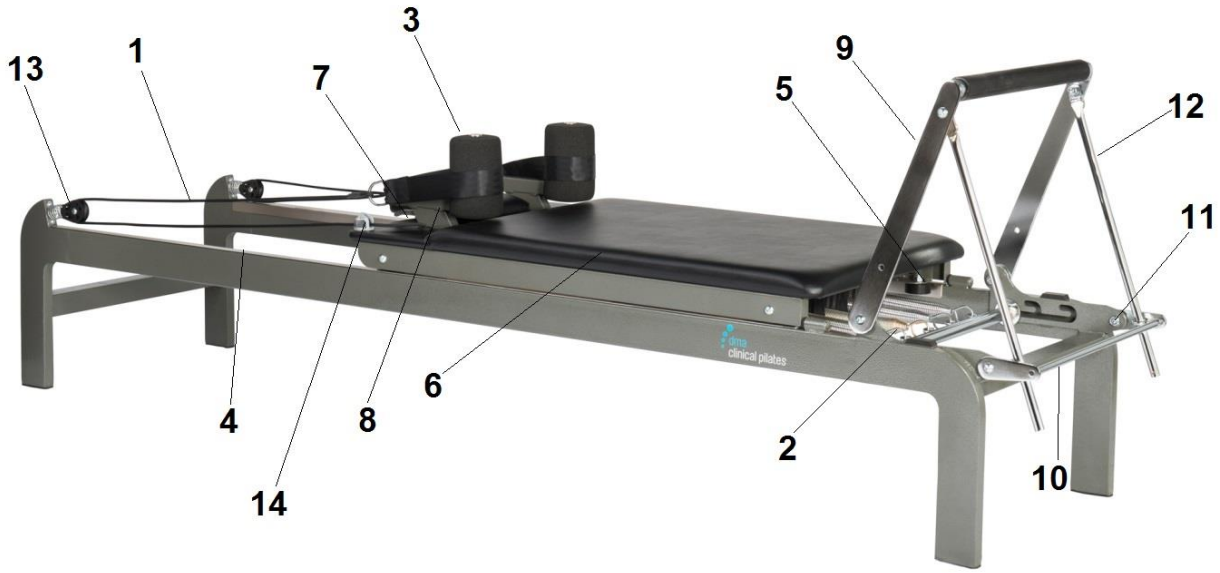

Trapeze tables

1) Tighten top bolts
2) Replace Upper Swing bar
3) Straightening poles
4) Replace Lower Swing bar
5) Trapeze Set Up